CORE1 Guide KIT Specifications
Guided Drilling Protocol
Appendix

CORE1 **Guide KIT**

CORE1 Guide KIT Specifications

Order Code : CGK

First Drill

Use during initial drilling

Guide Drill

Use according to fixture's diameter

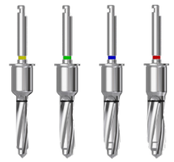

Cortical Drill

Use when removing hard bone

(Hard Normal)

Fixture Driver

Use when placing fixture

Fixing Anchor

Use to fix template in place

F.A Driver

Use when drilling with fixing anchor

Tissue Punch

Use for removing gingiva

Bone Flatter

Use for flattening irregular bone

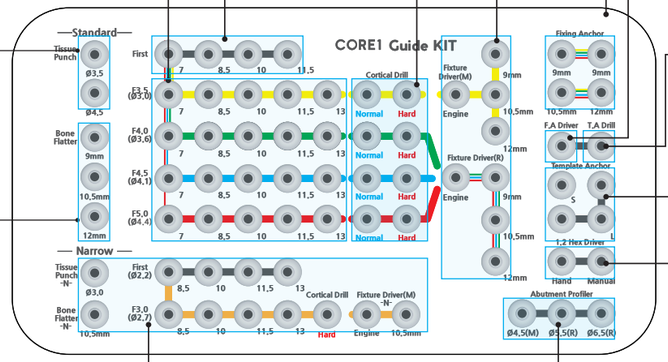

T.A Drill

Use before drilling with template anchor

Template Anchor

Use to fix template in place

Use for anterior mandible

Use when placing F 3.0 Fixture

ABT. Profiler

Use for removing bone that disrupts contact with upper section

1.2 Hex Driver

Use when in contact with upper section