CORE Master KIT Simple Specifications

Order Code : CMKS

CORE Drill

Attach stopper according to the Fixture Diameter

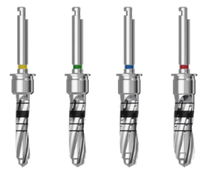

Stopper

Connect to drill for Depth Control

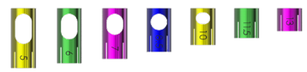

Parallel Pin

Use for checking direction of drill hole

First Drill

Use during initial drilling

ABT. Profiler

Use for removing bone that disrupts contact with upper section

Point Drill

Use to mark drilling area

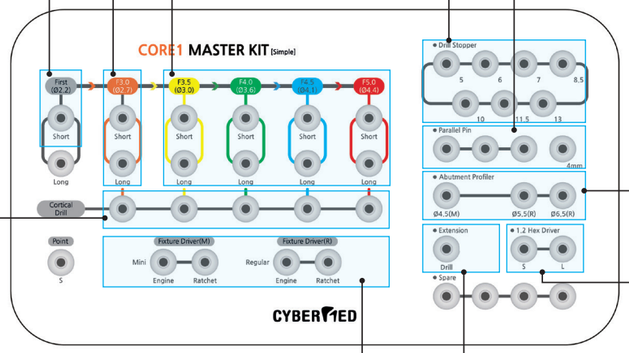

Cortical Drill

Use when removing hard bone

1.2 Hex Driver

Use when in contact with upper section

Fixture Driver

Use when placing fixture

Extension

Use to extend length of drill and driver

CORE Master KIT Full Specifications

Order Code : CMKF

Fixture Driver

Use when placing fixture

Point Drill

Use to mark drilling area

Extension

Use to extend length of drill and driver

First Drill

Use during initial drilling

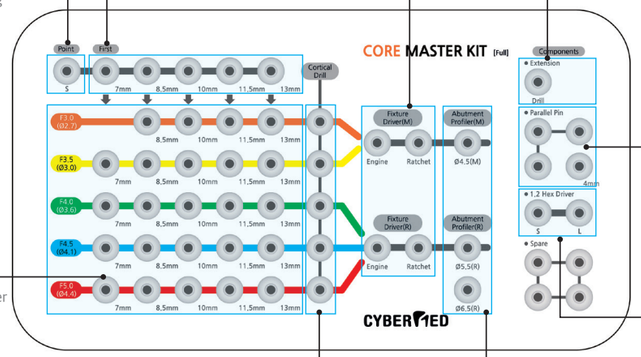

Parallel Pin

Use for checking direction of drill hole

CORE Drill

Use fixture according to diameter and length

1.2 Hex Driver

Use when in contact with upper section

Cortical Drill

Use when removing hard bone

ABT. Profiler

Use for removing bone that disrupts contact with upper section